IQ-3100 CONEXUS
SKYLIGHT 78

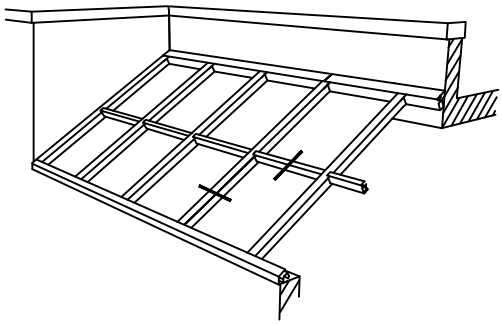

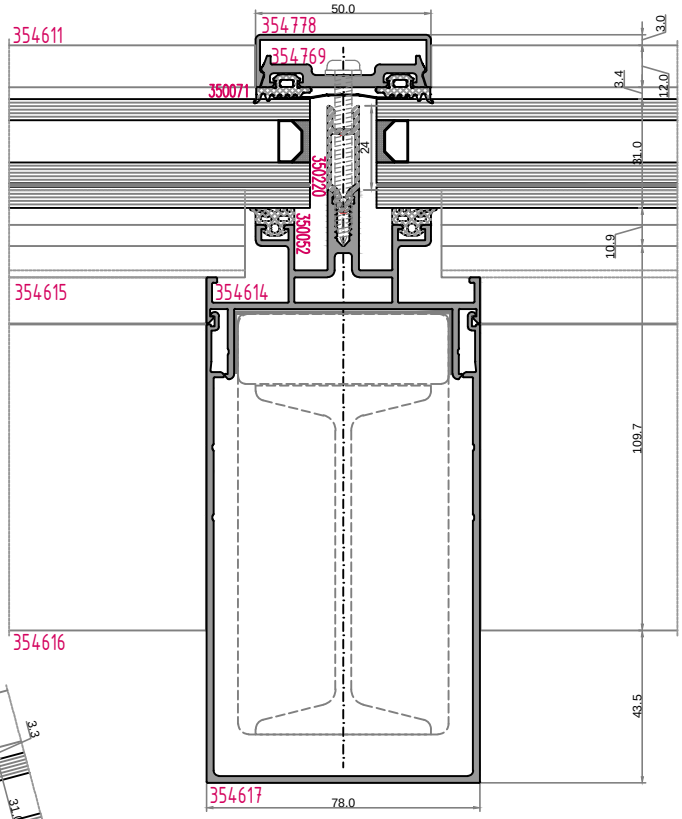

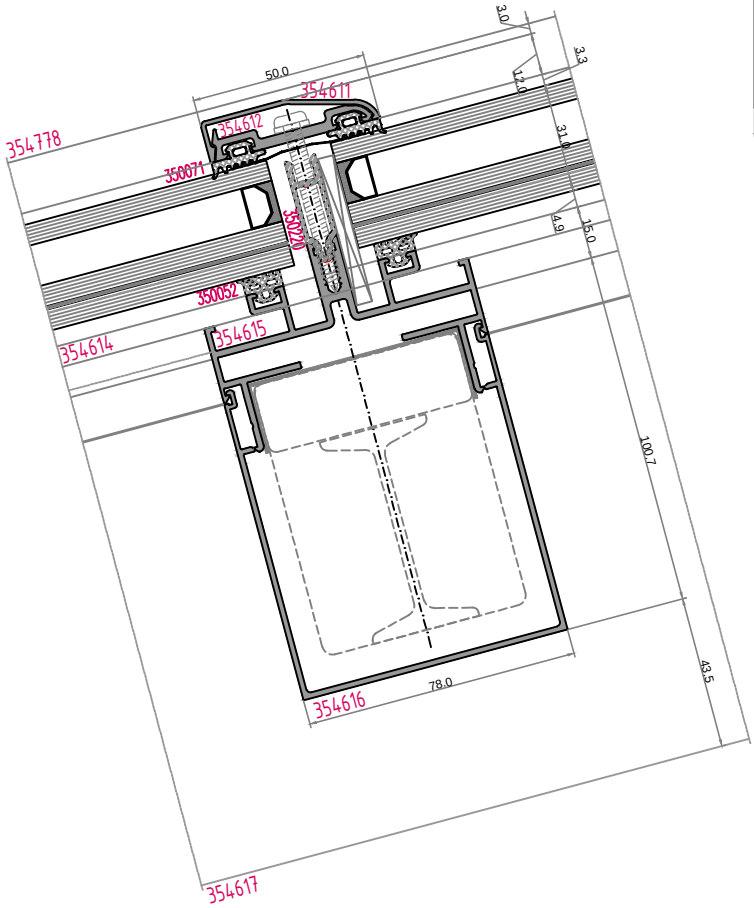

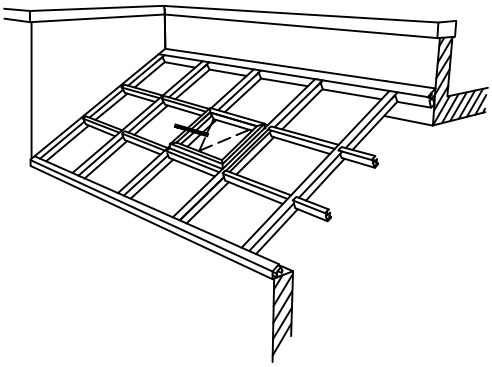

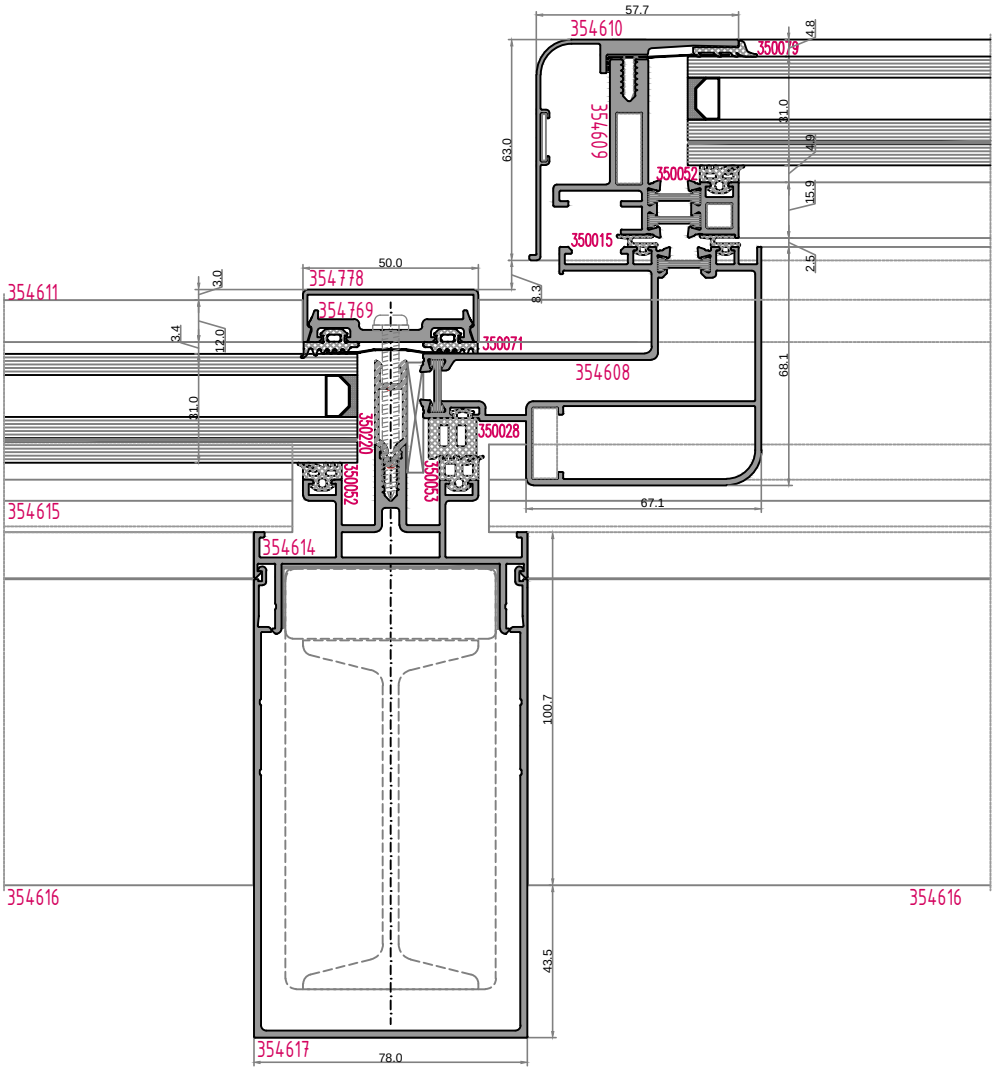
57.7
354610
350079
4.8
354609
63.0
31.0
4.9
350052
15.9
350015
2.5
50.0
354778
3.0
354611
8.3
354769
3.4
12.0
350071
354608
68.1
31.0
350220
350028
350292
350053
67.1
354615
354614
100.7
354616
354616
43.5
354617
78.0

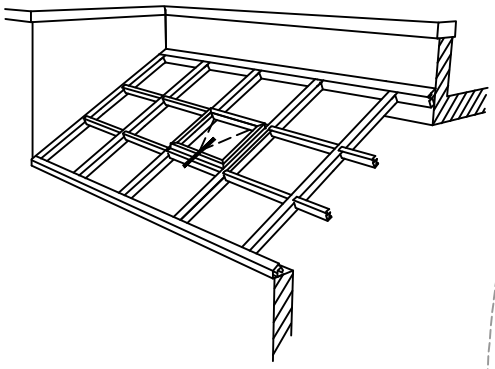

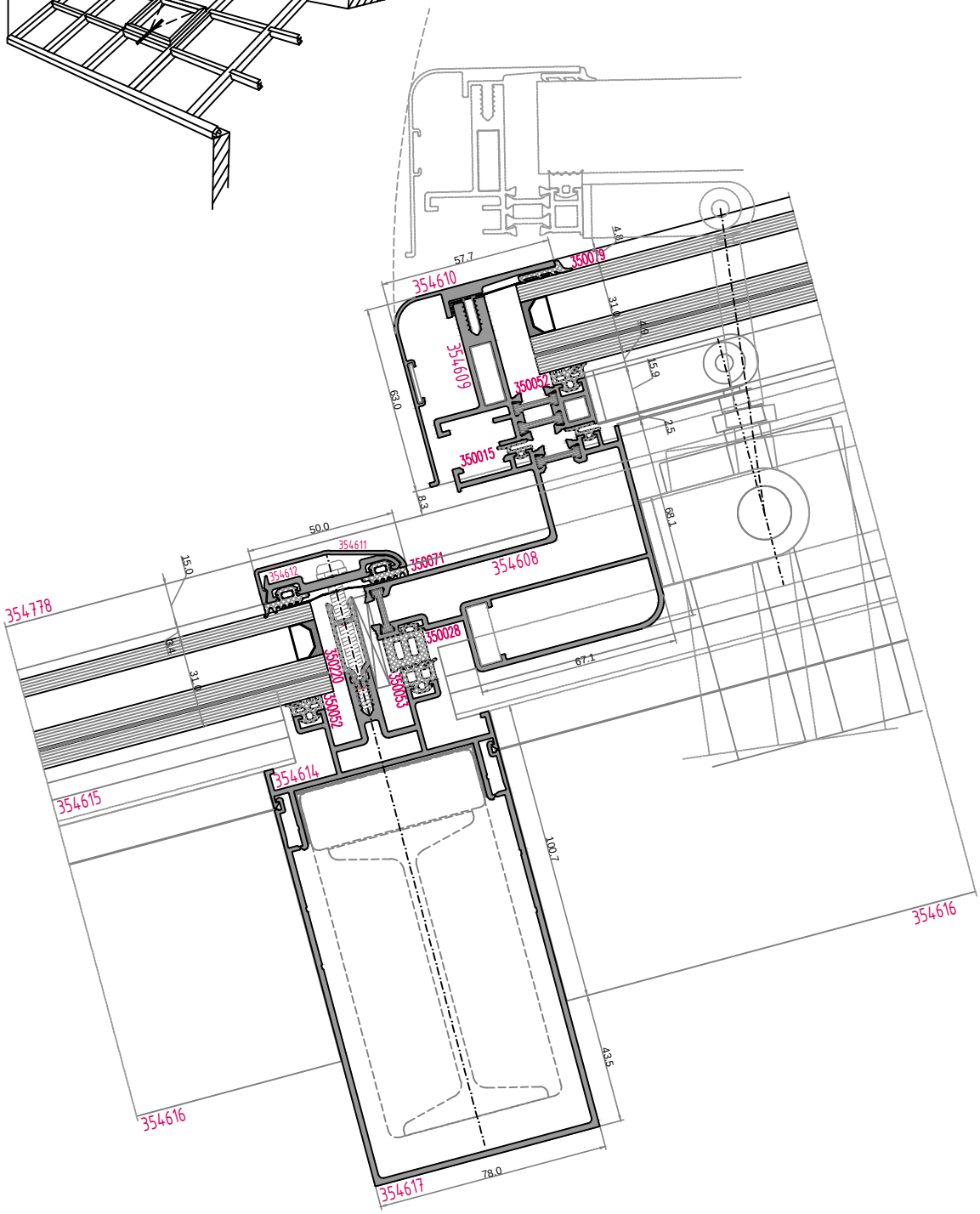
354610
350079
354609
350052
350015
354611
354612
350071
354608
354778
350028
350070
350053
350052
354614
354615
354616
354616
354617
57.7
63.0
8.3
50.0
15.0
31.0
67.1
68.1
100.7
43.5
78.0

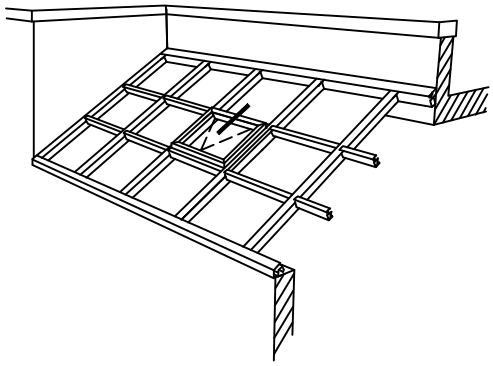

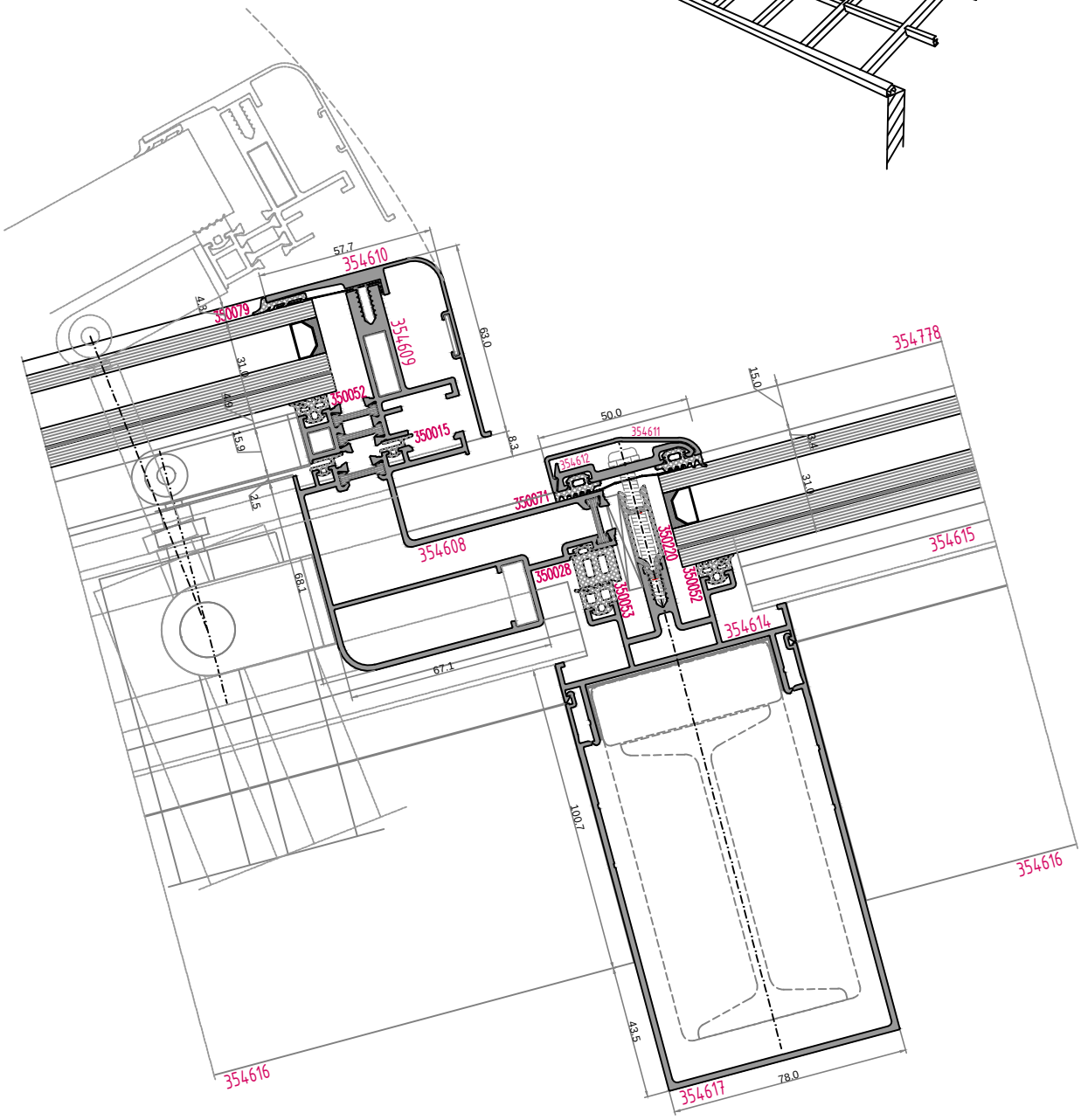
354610
354609
350079
350052
350015
354608
350071
354611
354612
350028
350053
350020
350092
354614
354615
354616
354617
354778
57.7
63.0
31.0
15.9
12.5
68.1
67.1
50.0
15.0
31.0
100.7
43.5
78.0

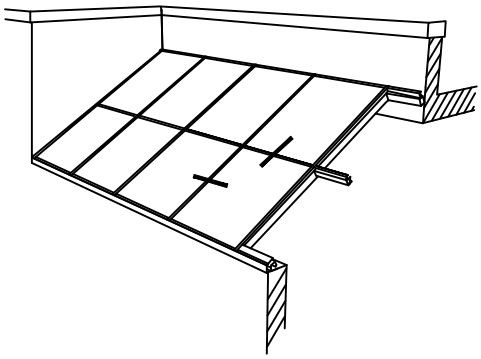

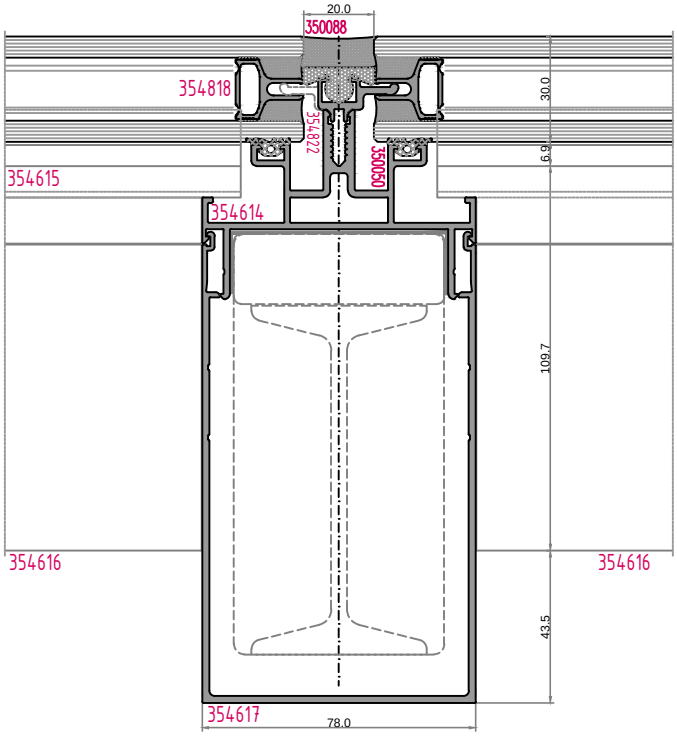
20.0
350088
354818
354822
350050
354615
354614
354616
354616
354617
78.0
30.0
6.9
109.7
43.5

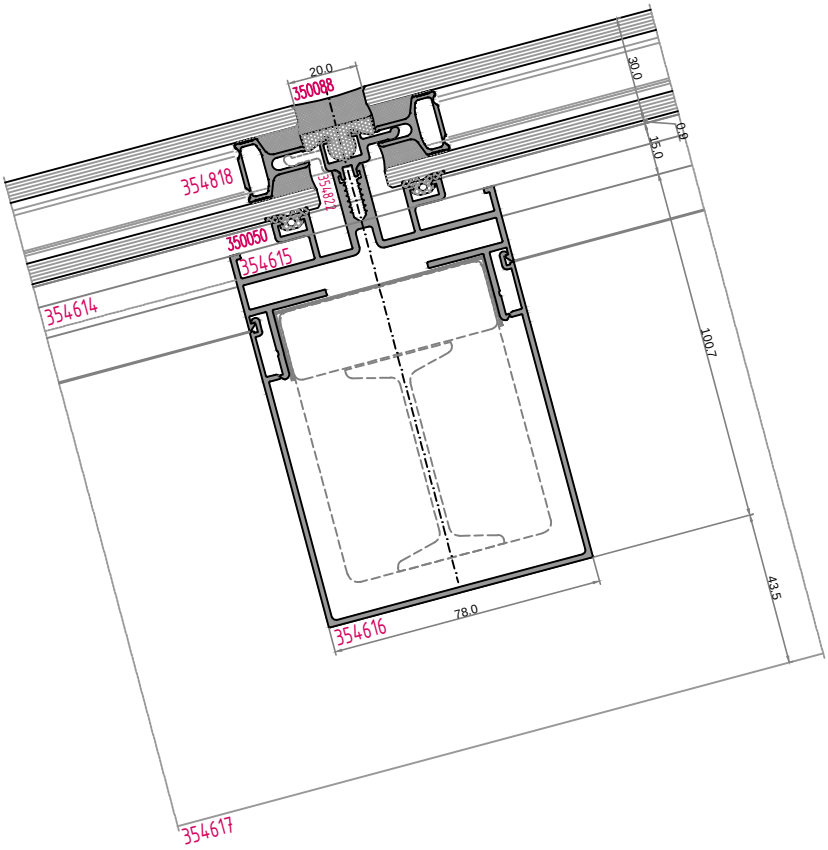
20.0
350088
354818
354822
350050
354615
354614
354616
354617
78.0
30.0
6.9
15.0
100.7
43.5

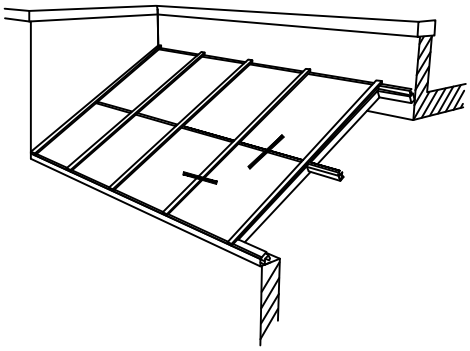

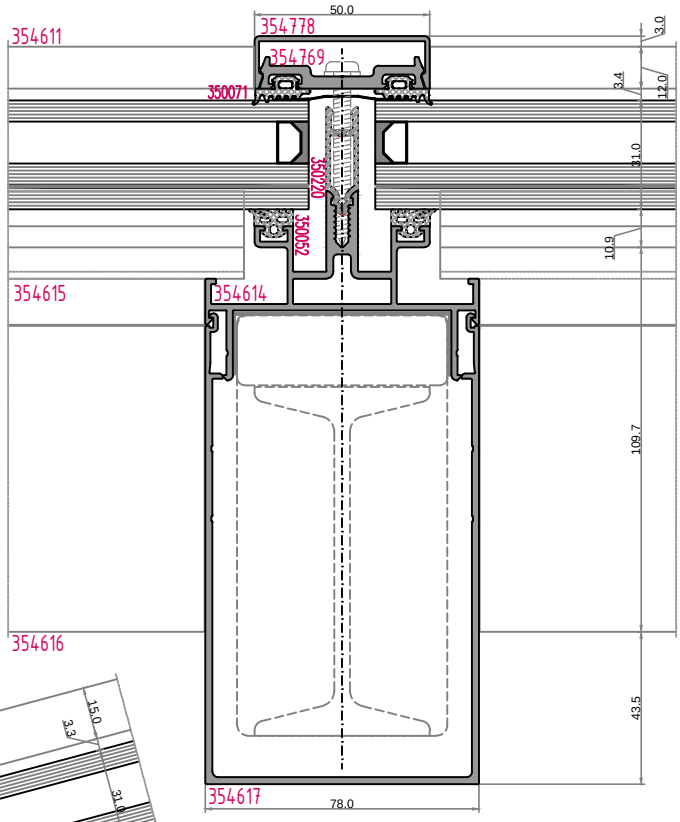
50.0
354611
354778
354769
350071
350070
350052
354615
354614
354616
354617
78.0
3.0
3.4
12.0
31.0
10.9
109.7
43.5

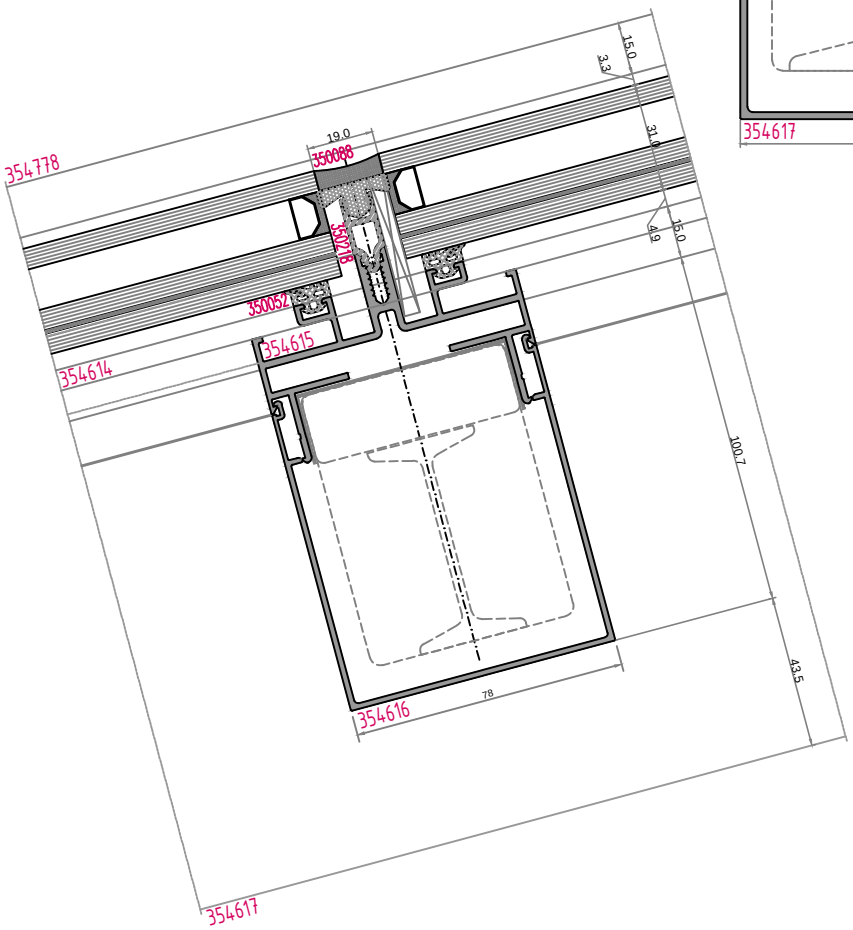
354778
19.0
350088
350070
350052
354615
354614
354616
354617
78
15.0
3.3
31.0
15.0
4.9
100.7
43.5

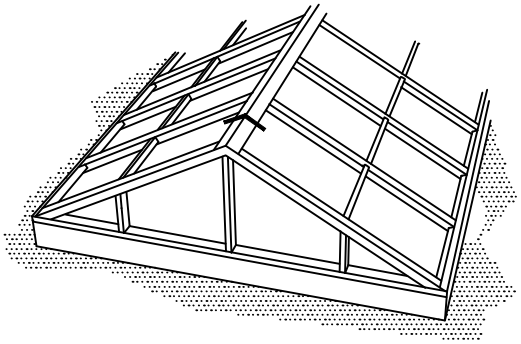

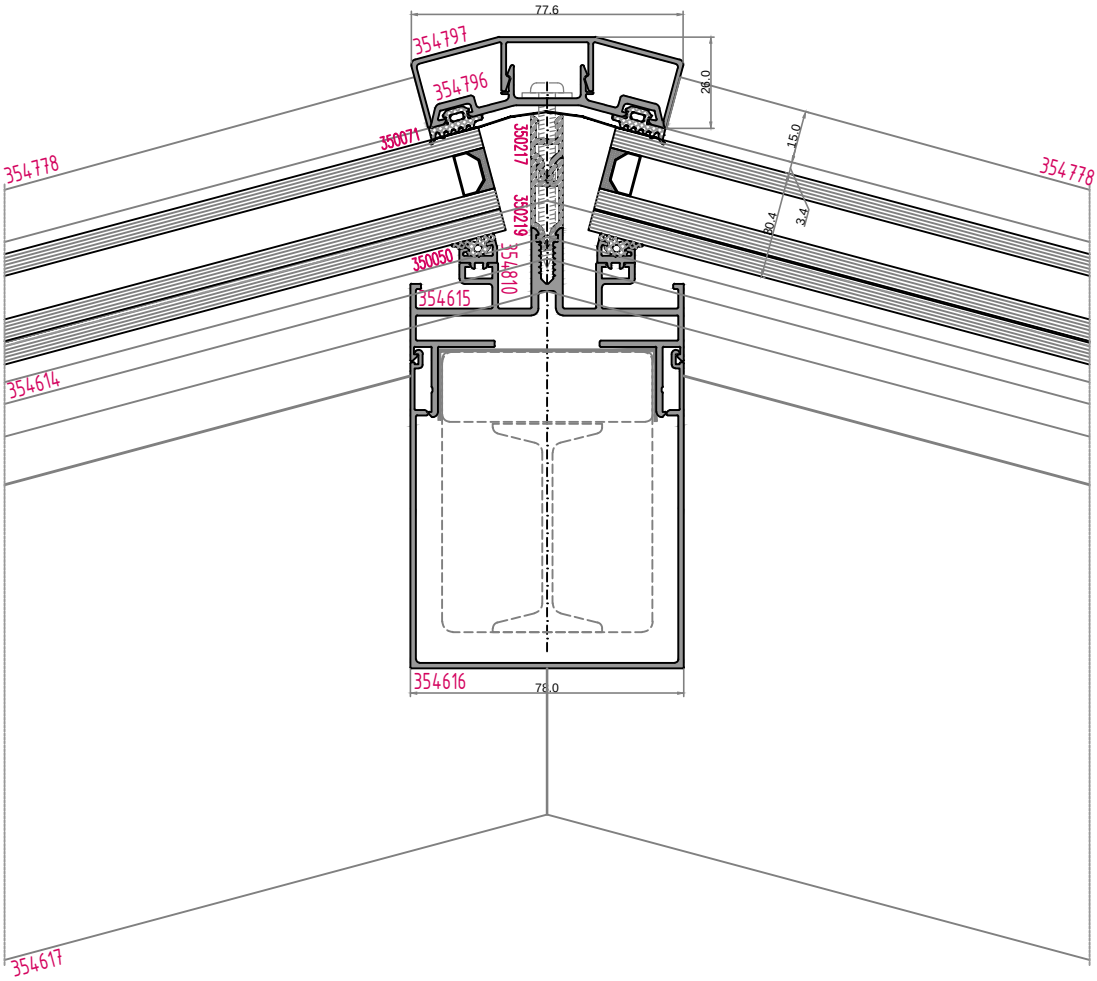
77.6
354797
354796
28.0
350071
350217
350219
354810
350050
354615
354778
354778
15.0
20.4
3.4
354614
354616
78.0
354617

IQ-3100 CONEXUS
SKYLIGHT 78

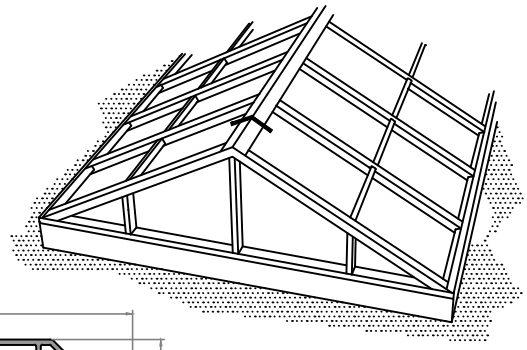

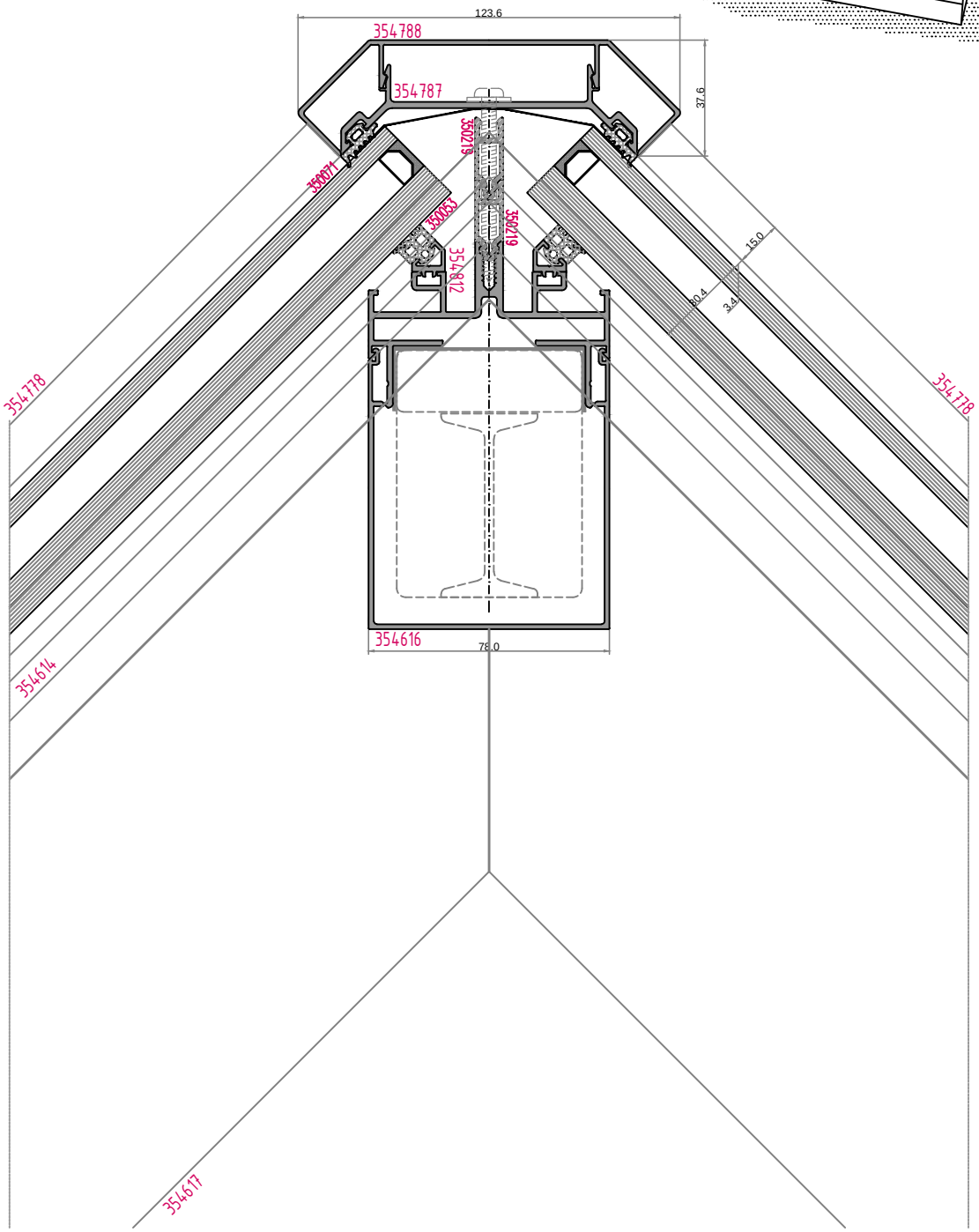

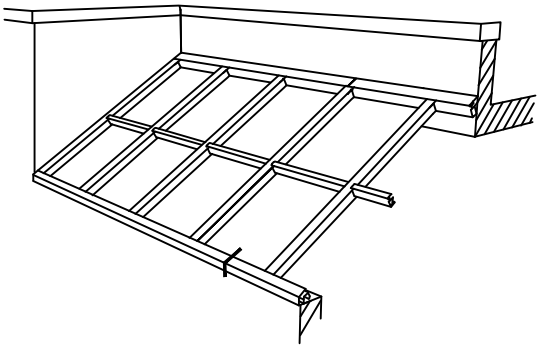

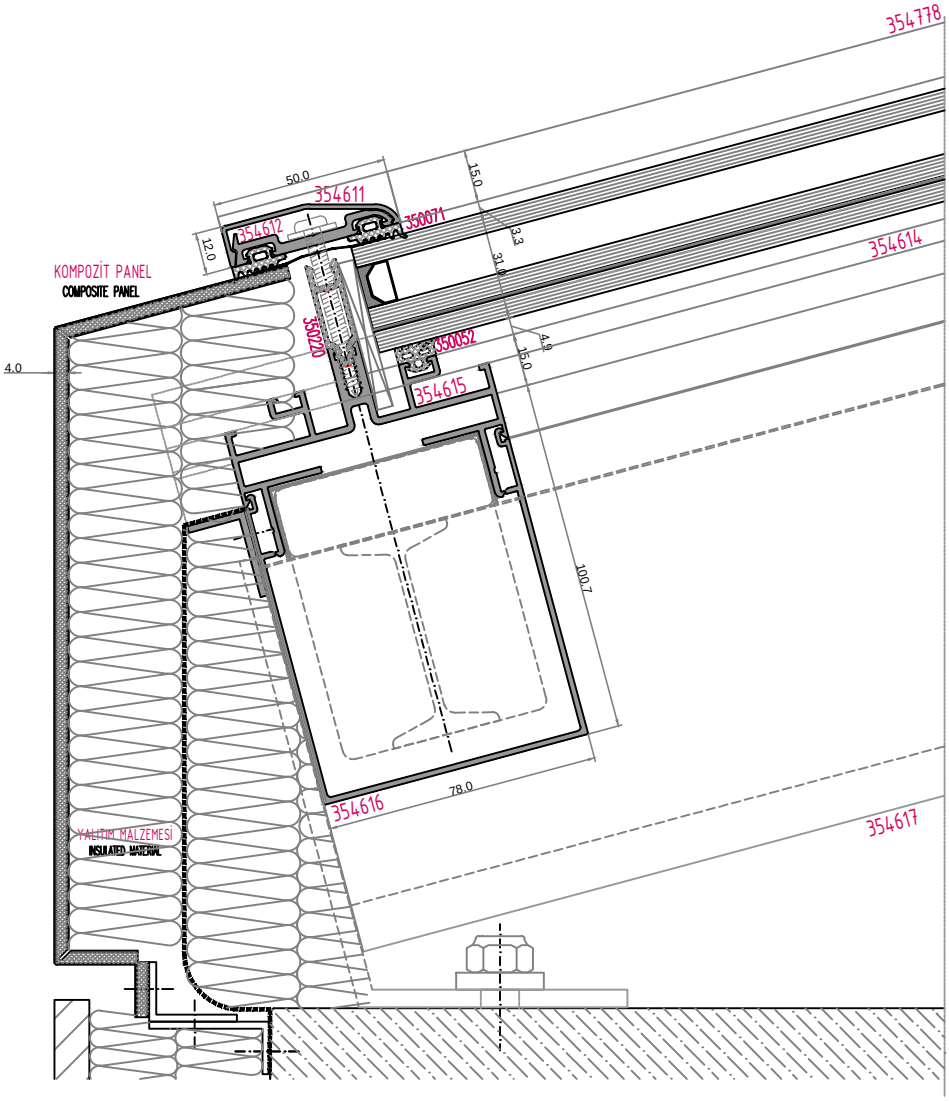
354778
50.0
354611
15.0
354612
350071
12.0
3.3
31.0
354614
KOMPOZİT PANEL
COMPOSITE PANEL
350220
350052
4.9
15.0
4.0
354615
100.7
78.0
354616
354617
YALITIM MALZEMESİ
INSULATED MATERIAL

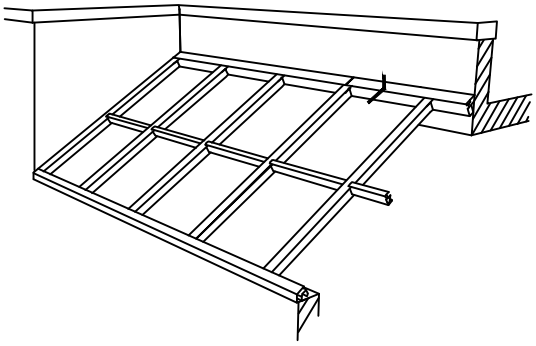

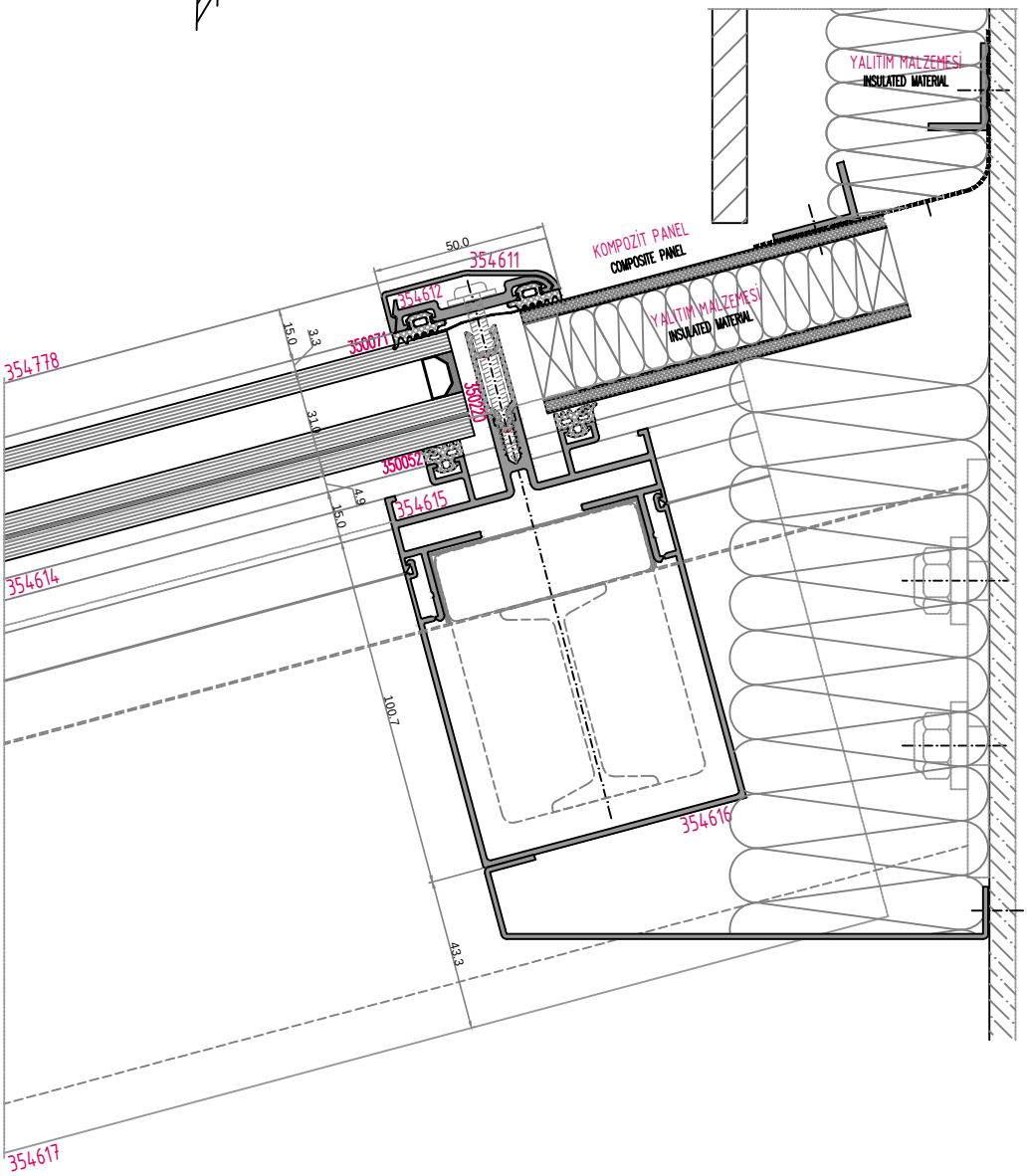
YALITIM MALZEMESİ
INSULATED MATERIAL
KOMPOZİT PANEL
COMPOSITE PANEL
YALITIM MALZEMESİ
INSULATED MATERIAL
50.0
354611
354612
350071
350052
354615
354616
354617
354614
354778
15.0
3.3
31.0
4.9
15.0
100.7
43.3

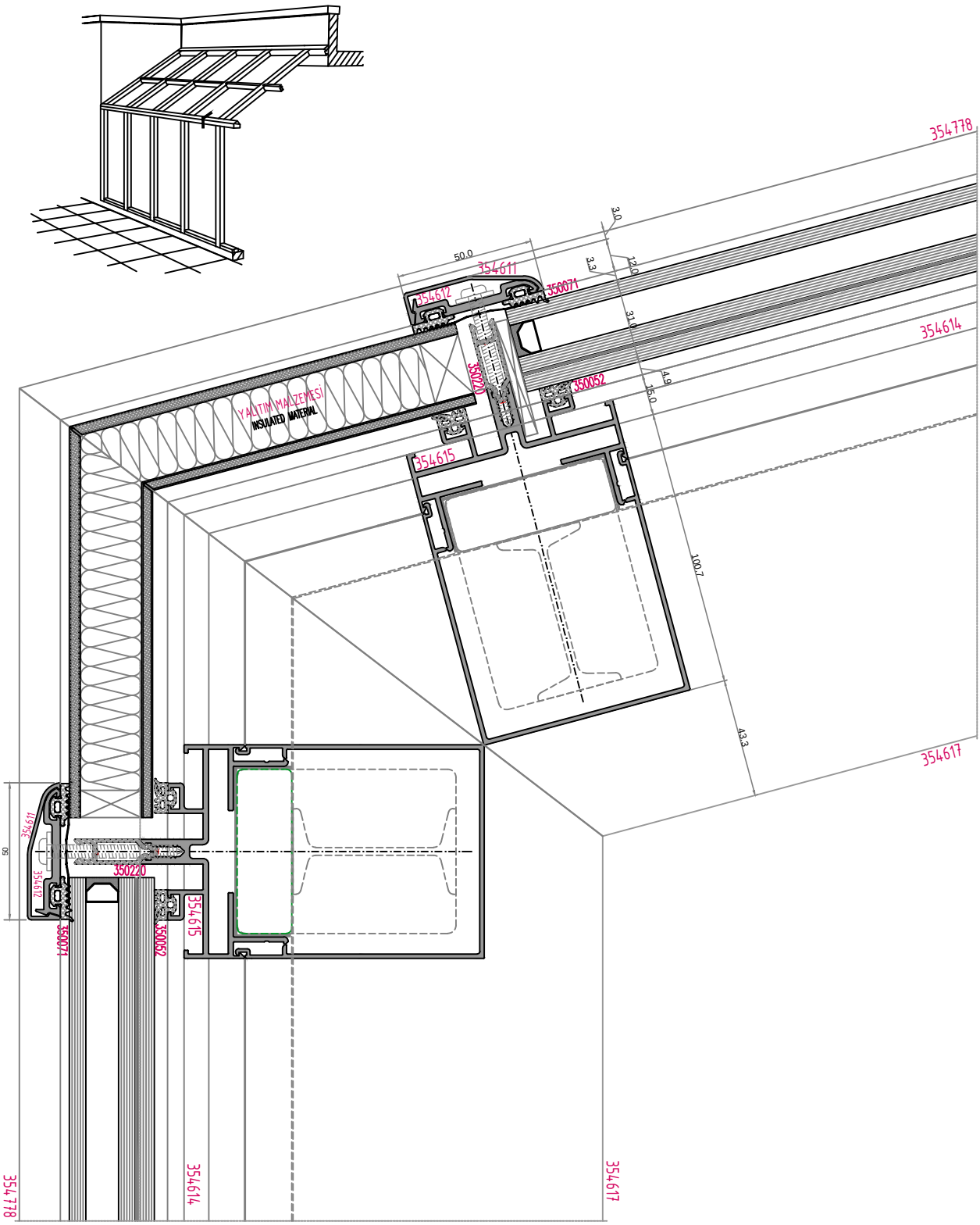
354778
354611
354612
350071
354614
350220
350052
354615
354617
YALITIM MALZEMESİ
INSULATED MATERIAL
50.0
3.0
3.3
12.0
31.0
4.9
15.0
100.7
43.3
50